PREDL GU LINER SYSTEMS

GU LIFT STATION / WET WELL LINER

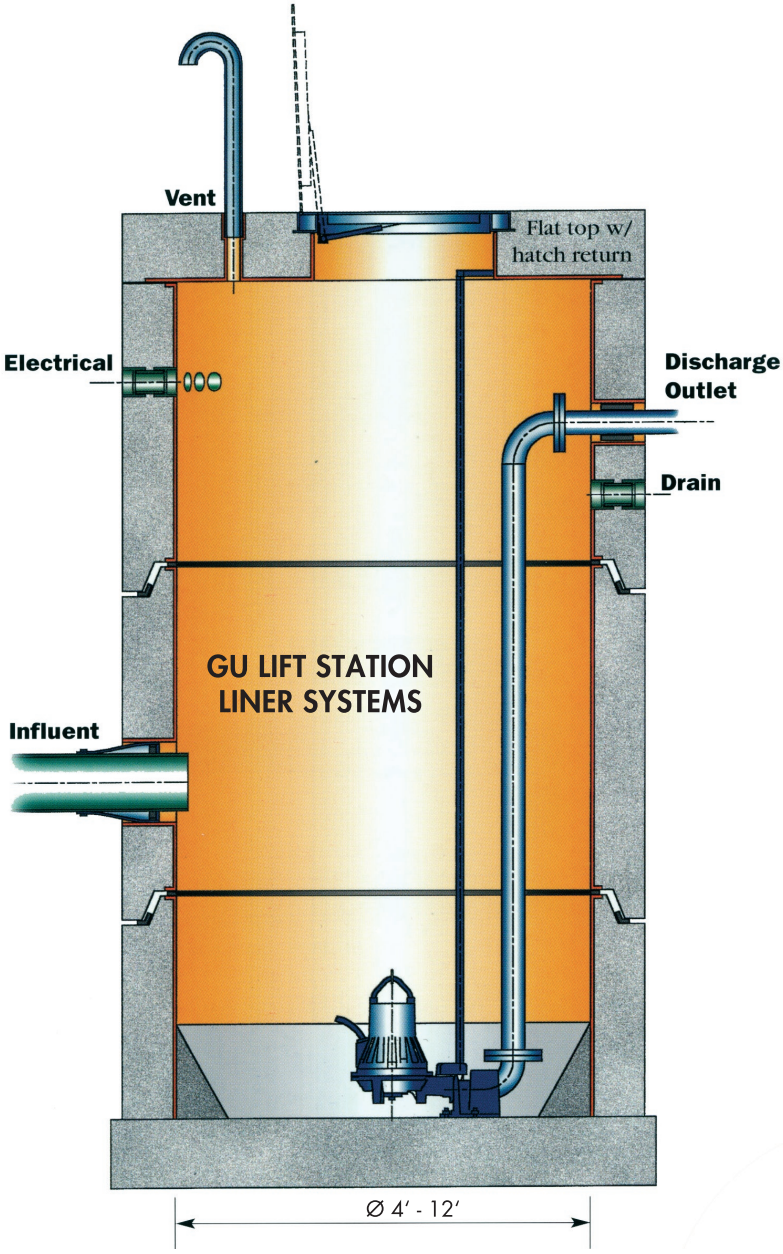

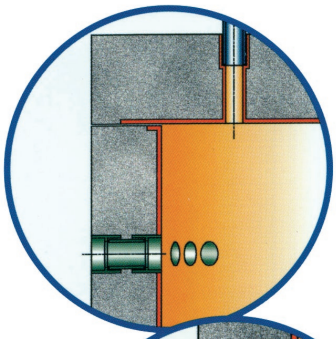

Vent (as specified)
GU Bell & Gasket for DIP or PVC coupler assembly

Electrical
PVC Sch 80

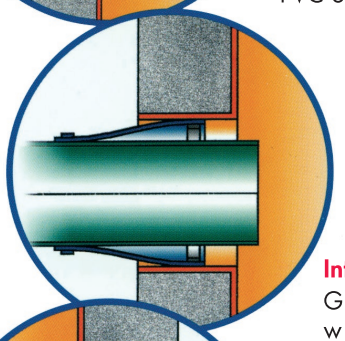

Influent
GU Liner Sleeve w / Rubber boot

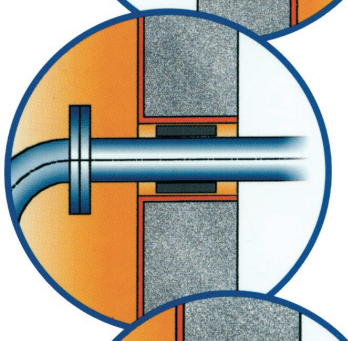

Discharge Outlet
GU Liner Sleeve w/either Link Seal or Rubber boot

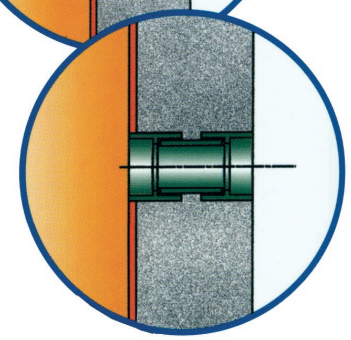

Drain
PVC Sch 80

OPTION
with welded joint

Liner joints may be welded by hot air extrusion with PP welding bead if specified

* Sealant or gasket as specified for watertight connection

OPTION
with Butyl joint

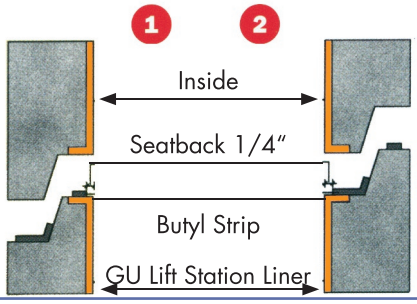

"Double" Butyl Sealant Joint
Mortar Type